Current part is item (4) on diagram. Available at www.oshkoshequipment.com

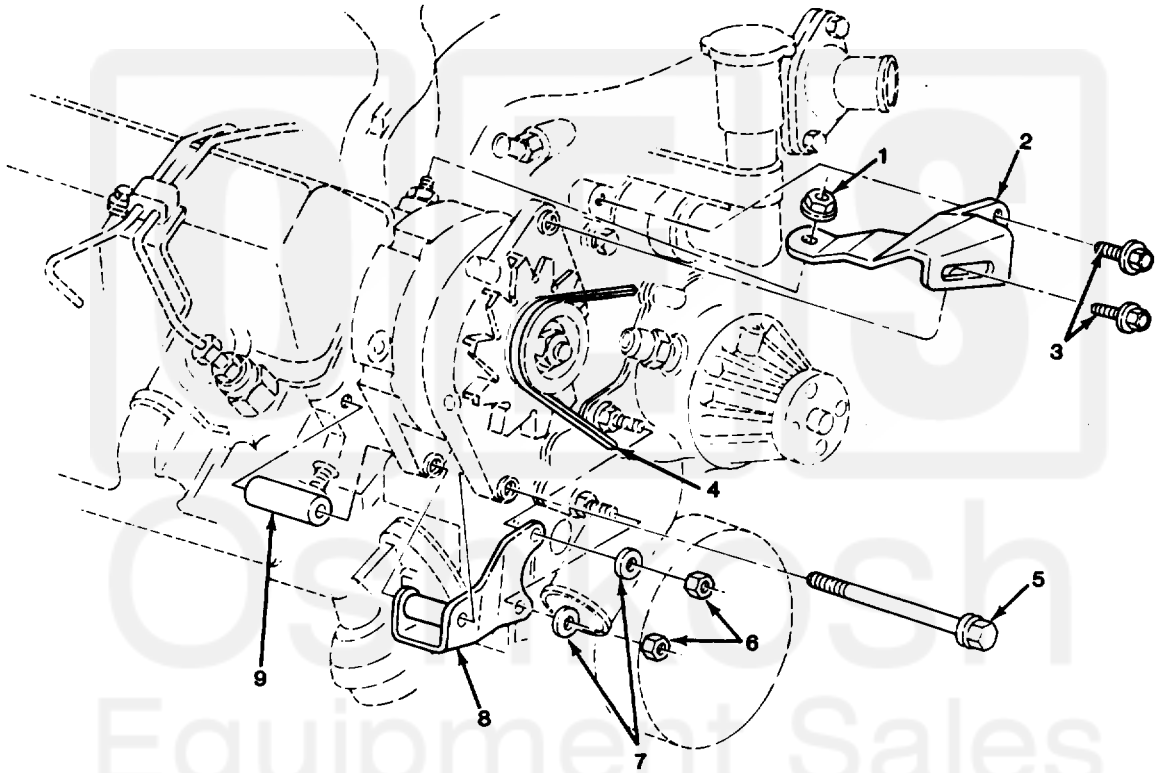

TA510841

FIGURE 34. ALTERNATOR AND MOUNTING HARDWARE, RIGHT SIDE (ALL EXCEPT M1010).

Current part is item (4) on diagram. Available at www.oshkoshequipment.com

Current part is item (4) on diagram. Available at www.oshkoshequipment.com

(1) ITEM NO	(2) SMR CODE	(3) CAGEC	(4) PART NUMBER	(5) DESCRIPTION AND USABLE ON CODES (UOC)	(6) QTY
				GROUP 0601 GENERATOR, ALTERNATOR	
				FIG. 34 ALTERNATOR AND MOUNTING HARDWARE, RIGHT SIDE (ALL EXCEPT M1010)	
1	PAOZZ	11862	14005953	SHIELD,EXPANSION UOC:194,208,209,230,231,252,254,256	1
2	PAOZZ	11862	14067724	BRACKET,ENGINE ACCE UOC:194,208,209,230,231,252,254,256	1
3	PAOZZ	11862	1635490	BOLT,SELF-LOCKING UOC:194,208,209,230,231,252,254,256	2
4	PAOZZ	20796	42-6923	BELT,V UOC:194,208,209,230,231,252,254,256	1
5	PAOZZ	11862	14067717	BOLT,MACHINE UOC:194,208,209,230,231,252,254,256	1
6	PAOZZ	11862	11506101	NUT UOC:194,208,209,230,231,252,254,256	2
7	PAOZZ	96906	MS27183-16	WASHER,FLAT UOC:194,208,209,230,231,252,254,256	2
8	PAOZZ	11862	14067714	BRACKET,ENGINE ACCE UOC:194,208,209,230,231,252,254,256	1
9	PAOZZ	11862	14067725	SPACER,SLEEVE UOC:194,208,209,230,231,252,254,256	1
				END OF FIGURE	

Current part is item (4) on diagram. Available at www.oshkoshequipment.com